Downloaded from Arrow.com.

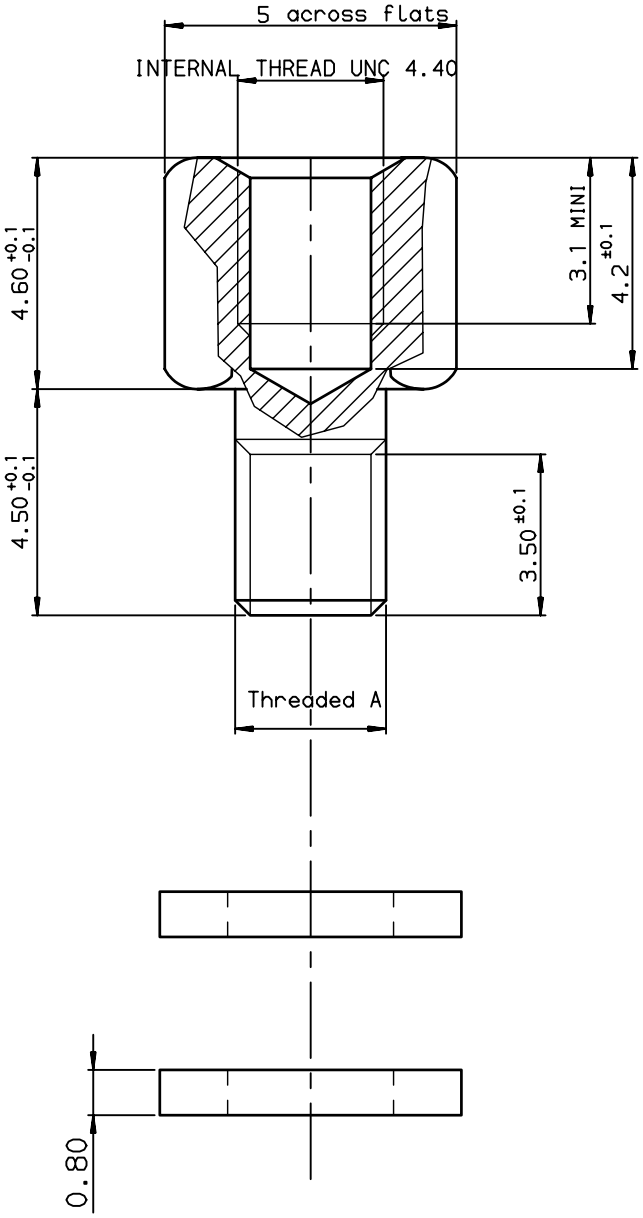

TECHNICAL CHARACTERISTICS :

Female screw locks: stell, tin plated .

Compensating washer: steel , tin plated .

Packaging : per 100 pieces .

Corrosion resistance : 24 hours exposure to salt spray .

PART NUMBER	THREADED A
863001019TLF	UNC 4.40
863001018TLF	M3

NOTE:RoHS INFORMATIONS

- The "LF" products meet European union Directives and other country regulations as described in GS-22-008.
- Plating Sn (pure bright) over copper
- Packaging spec: see GS-14-920

European Views

www.fciconnect.com			surface ISO 1302		tolerance std ISO 406 ISO 1101	projection	mm
			TOLERANCES UNLESS OTHERWISE SPECIFIED				
Dr	JARRY	2000/09/18	ANGULAR	LINEAR	0.X ±0.1	size A3	Scale 10
Eng	PESSON	2000/09/18			0.XX ±0.1		
Chr	LEGARE	2000/09/18	0.XX° ±2°		0.XXX ±0.1	ECN	LS09-0006
Appr	LEGARE	2000/09/18	Product family		D-SUB	Spec ref	-
title	FEMALE SCREW LOCKS D SUB ACCESSORIES					dwg no	C01-8655-1548 Rev. E
catalog no			-			CUSTOMER	sheet 1 of 1

rev	ecn no	dr	date
B	-	JOU	2003/01/17
C	LS05-0026	MPE	2005/07/08
D	LS06-0097	LGO	2006/07/28
E	LS09-0006	PCR	2009/01/08
-	-	-	-
-	-	-	-
-	-	-	-

REV F - 2006-04-17

Copyright FCI.

PDM: Rev:E STATUS:Released Printed: Jan 18, 2011